GENERAL NOTES

1. SOME CABLES MAY VARY IN NUMBER OF CONDUCTORS DEPENDING ON APPLICATION.
2. STANDARD COMMERCIAL SHIPBOARD ARMORED CABLE IS RECOMMENDED FOR MOST APPLICATIONS.

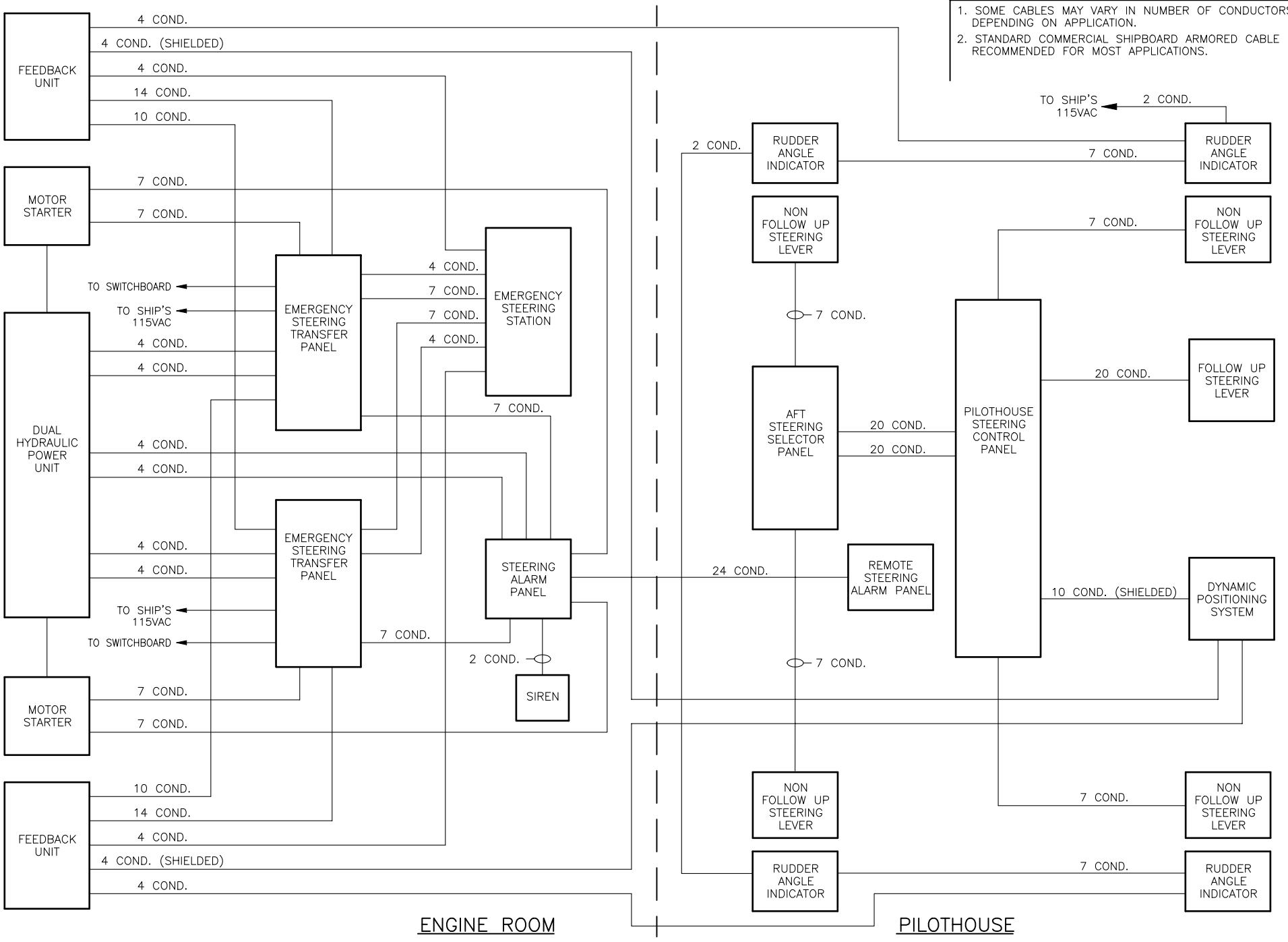

EMI
ENGINE MONITOR, INC.
179 HICKORY AVE.
HARAHAN, LA 70123

PHONE: (504) 737-3172
FAX: (504) 737-5576
E-MAIL: emonitor@emi-marine.com
WEBSITE: www.emi-marine.com

TYPICAL INDEPENDENT RUDDER STEERING SYSTEM BLOCK DIAGRAM

DWG: TYP-IND-BLOCK

DATE: 6/30/00 | SHEET 1 | REV: – | FILE: TYP-IND-BLOCK

THIS DRAWING CONTAINS PROPRIETARY INFORMATION AND DESIGNS OWNED BY ENGINE MONITOR, INC. (E.M.I.). ALL DESIGNS, MANUFACTURING, REPRODUCTION, USE, PATENT RIGHT, AND SALES RIGHTS REGARDING THE SAME ARE EXPRESSLY RESERVED BY ENGINE MONITOR, INC.